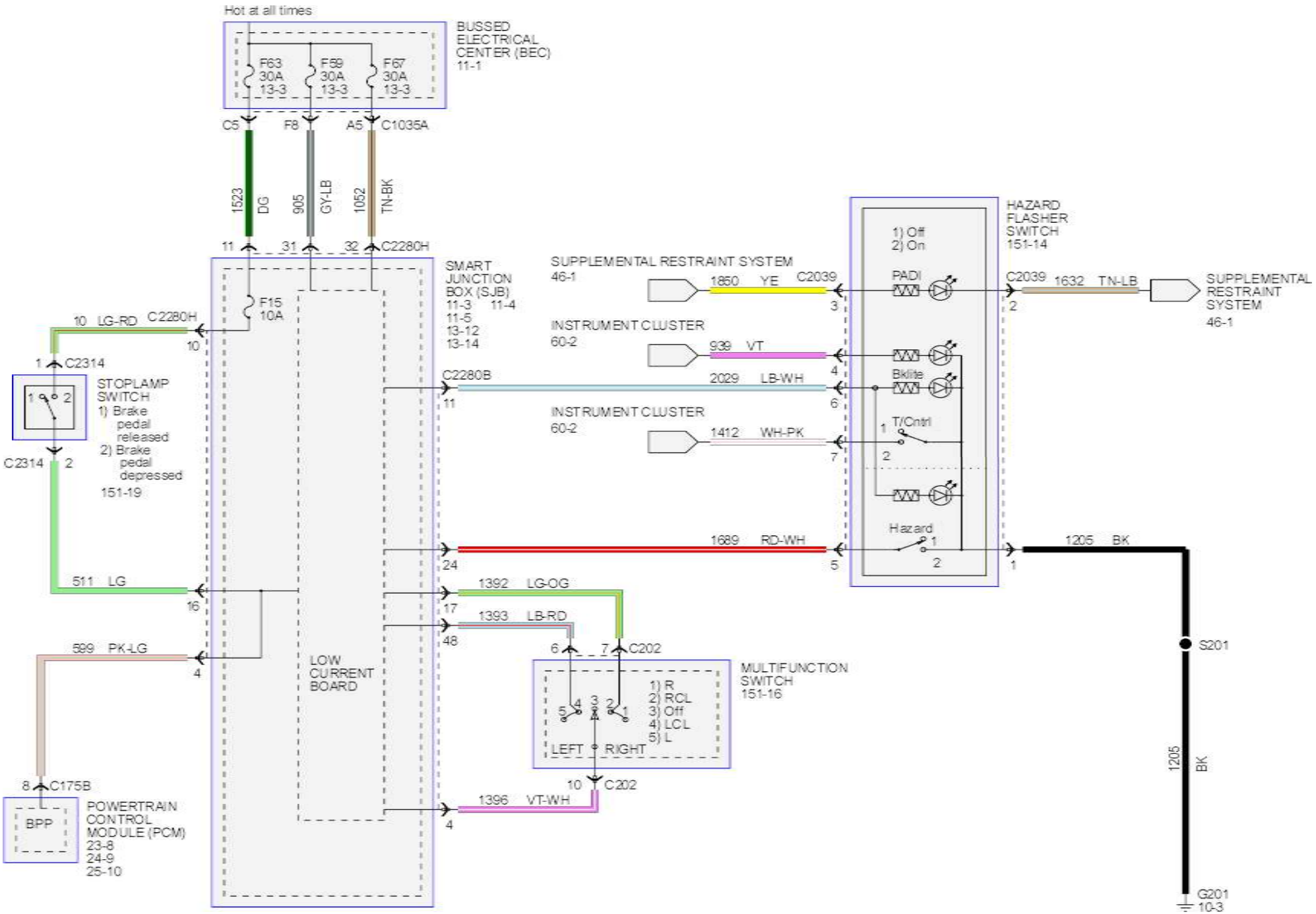
Hot at all times
BUSSED ELECTRICAL CENTER (BEC) 11-1
F63 30A 13-3
F59 30A 13-3
F67 30A 13-3
C5
F8
A5
C1035A
1523 DG
905 GY-LB
1052 TN-BK
11
31
32
C2280H
SMART JUNCTION BOX (SJB) 11-3 11-4 11-5 13-12 13-14
F15 10A
LOW CURRENT BOARD
10 LG-RD C2280H
10
1 C2314
STOPLAMP SWITCH
1) Brake pedal released
2) Brake pedal depressed
151-19
C2314 2
511 LG
16
599 PK-LG
4
8 C175B
BPP
POWERTRAIN CONTROL MODULE (PCM) 23-8 24-9 25-10
SUPPLEMENTAL RESTRAINT SYSTEM 46-1
1850 YE C2039
3
INSTRUMENT CLUSTER 60-2
939 VT
4
C2280B
2029 LB-WH
11
6
INSTRUMENT CLUSTER 60-2
1412 WH-PK
7
1689 RD-WH
24
5
1392 LG-OG
17
1393 LB-RD
48
6 7 C202
MULTIFUNCTION SWITCH 151-16
1) R
2) RCL
3) Off
4) LCL
5) L
LEFT RIGHT
10 C202
1396 VT-WH
4
HAZARD FLASHER SWITCH 151-14
1) Off
2) On
PADI
Bklite
T/Cntrl
Hazard
C2039 1632 TN-LB
2
SUPPLEMENTAL RESTRAINT SYSTEM 46-1
1205 BK
1
S201
1205 BK
G201 10-3

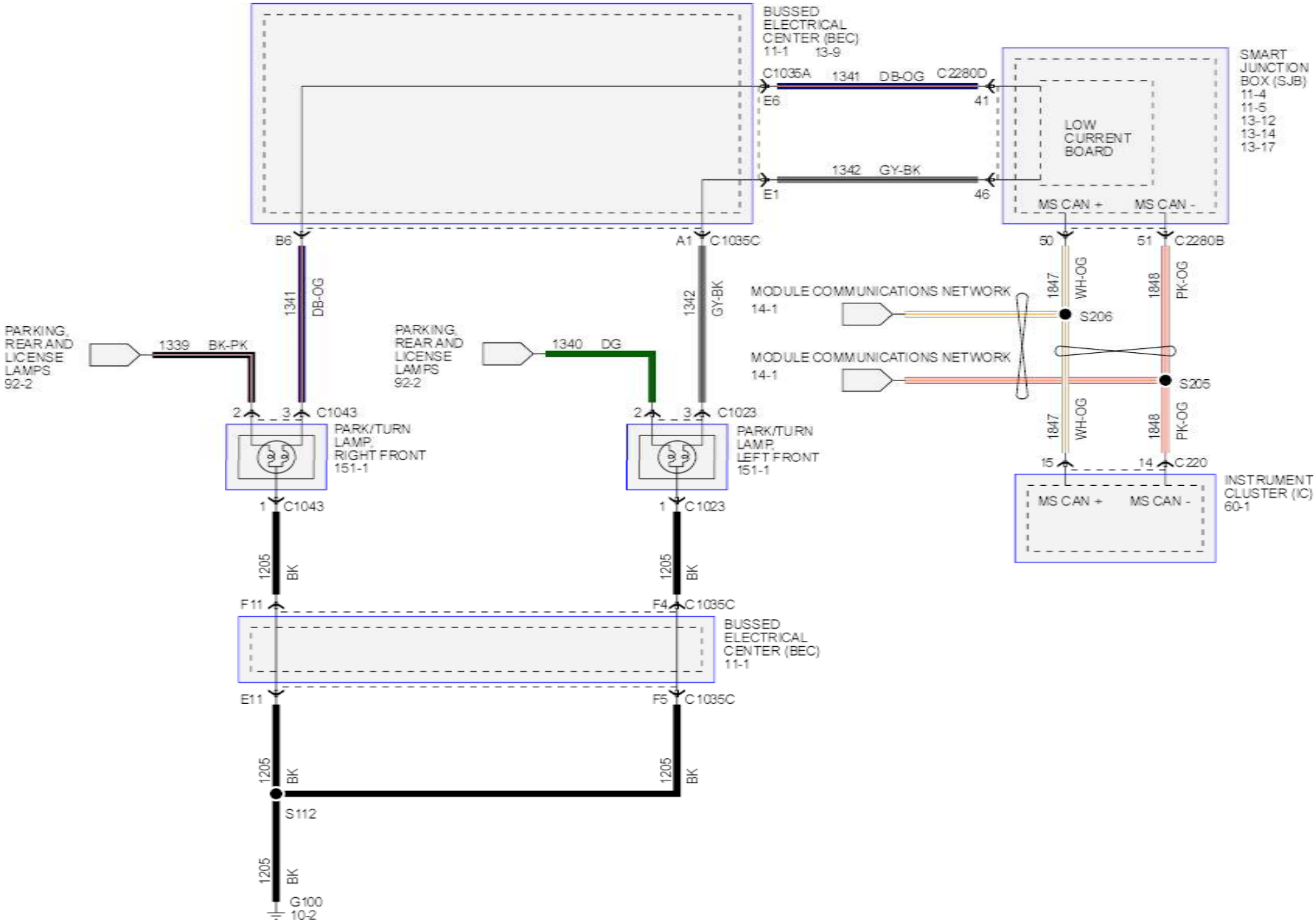
BUSSED ELECTRICAL CENTER (BEC) 11-1 13-9
C1035A
E6
1341 DB-OG
C2280D
41
SMART JUNCTION BOX (SJB) 11-4 11-5 13-12 13-14 13-17
LOW CURRENT BOARD
1342 GY-BK
E1
46
MS CAN + MS CAN -
B6
A1 C1035C
50
51 C2280B
1341 DB-OG
1342 GY-BK
1847 WH-OG
1848 PK-OG
MODULE COMMUNICATIONS NETWORK 14-1
S206
MODULE COMMUNICATIONS NETWORK 14-1
S205
PARKING, REAR AND LICENSE LAMPS 92-2
1339 BK-PK
PARKING, REAR AND LICENSE LAMPS 92-2
1340 DG
2 3 C1043
PARK/TURN LAMP, RIGHT FRONT 151-1
2 3 C1023
PARK/TURN LAMP, LEFT FRONT 151-1
1847 WH-OG
1848 PK-OG
15
14 C220
INSTRUMENT CLUSTER (IC) 60-1
MS CAN + MS CAN -
1 C1043
1 C1023
1205 BK
1205 BK
F11
F4 C1035C
BUSSED ELECTRICAL CENTER (BEC) 11-1
E11
F5 C1035C
1205 BK
1205 BK
S112
1205 BK
G100 10-2

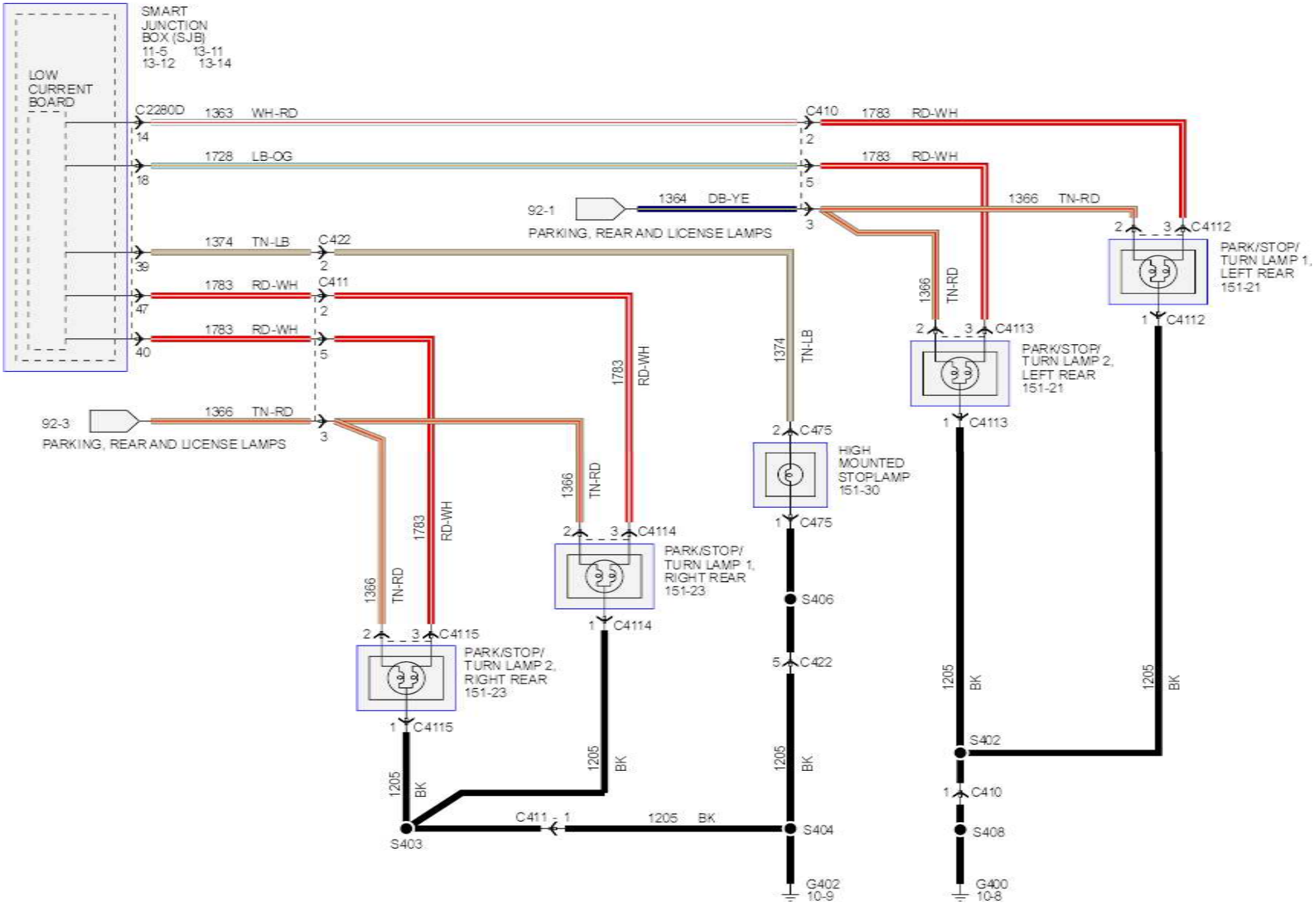
SMART JUNCTION BOX (SJB)
11-5 13-11
13-12 13-14
LOW CURRENT BOARD
C2280D
14
18
39
47
40
1363 WH-RD
1728 LB-OG
1374 TN-LB
1783 RD-WH
1783 RD-WH
92-1
PARKING, REAR AND LICENSE LAMPS
1364 DB-YE
C410
1783 RD-WH
1783 RD-WH
1366 TN-RD
C422
C411
92-3
PARKING, REAR AND LICENSE LAMPS
1366 TN-RD
C4112
PARK/STOP/ TURN LAMP 1, LEFT REAR 151-21
C4113
PARK/STOP/ TURN LAMP 2, LEFT REAR 151-21
C475
HIGH MOUNTED STOPLAMP 151-30
C4114
PARK/STOP/ TURN LAMP 1, RIGHT REAR 151-23
C4115
PARK/STOP/ TURN LAMP 2, RIGHT REAR 151-23
S406
S402
S408
S404
S403
G402 10-9
G400 10-8
1205 BK
C411 1